ABBY LIGHTING

220V 240V 50/60Hz | CRI 80 | L80B10 >50,000h | MacAdam Step 3 | Swivel | Tilt | UGR<16

Optional: Dimmable | Warm to Dim | CRI 90

Ovo Carbon TA | 15W



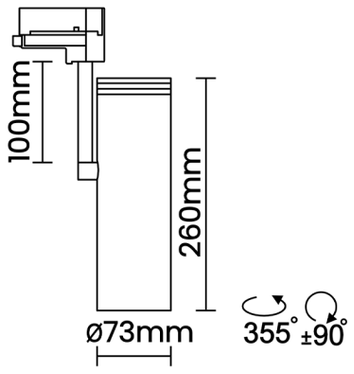

Product Reference

Environment Indoor

Installation Track Mounted

Construction & Materials

Housing Aluminium

Primary Lens PMMA

Primary Reflector PC metallised

Secondary Reflector -

Body Finish White,Black

Diffuser -

Antiglare Baffle -

Thermal Management

Heat Sink Material Die cast Aluminium

Cooling Technique Passive Cooling

Optical System

Beam Direction Adjustable

Tilt Yes

Swivel Yes

Electrical System

Driven with Constant Current Driver

Input Voltage/Hz 220V- 240V/50-60Hz

Control Gear Included

Mounting Integral

LED Power Watts 12.8W

System Power Watts 14.7W

Operating Voltage Vin 220-240 Vac

Power Factor p.f. > 0.95

Light Distribution

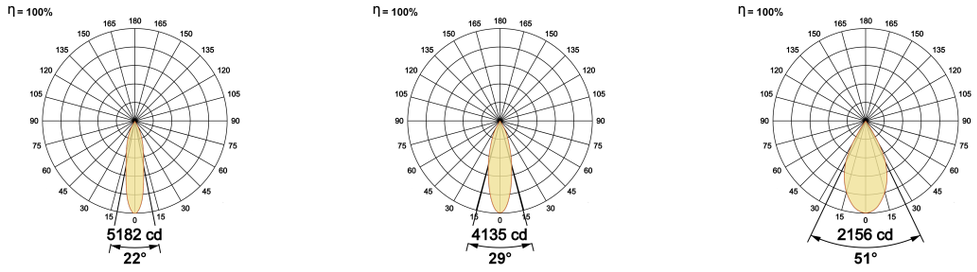

LED Technology

Binning 3 Step MacAdam

LED Life Time @ L80/B10 >50000 hours

Colour Rendering (CRI) CRI80,CRI90

Led Type COB

LED Fitted CREE COB LED 36Vdc/700mA

Controls

Standard Switchable On/Off

Optional PDIM,DDIM,Non Dimmable

Ordering Details

Code Example:	Name	Watt	CCT	CRI	Angle	Finish	Control
	Ovo Carbon TA	**15W**	**WW27K**	**CRI80**	**22°(SS)**	**SWH**	**On/Off**

Select one from each column with highlighted values to create the ordering code

NAME	WATT	LUMEN	EFFICACY	CCT		CRI	ANGLE	FINISH		CONTROL	
Ovo Carbon TA	**15W**	1312	89	2700K	**WW27K**	**CRI80**	22°(SS)	White	**SWH**	Non Dimmable	**On/Off**
		1352	92	3000K	**WW30K**	CRI90	29°(MD)	Black	**SBL**	Phase Dimmable	**PDIM**
		1447	98	4000K	**NW40K**		51°(WD)			Dali Dimmable	**DDIM**
		1474	100	5700K	**CW57K**						
				Warm to Dim	**W2D**						
Ovo Carbon TA	**15W**			**WW27K**		**CRI80**	**22°(SS)**	**SWH**		**On/Off**	