ABBY LIGHTING

220V 240V 50/60Hz | IP20 | L80B10 >50,000h | MacAdam Step 3 | CRI 90

Optional: Dimmable | Tunable White

Circulo P 90 | 50W



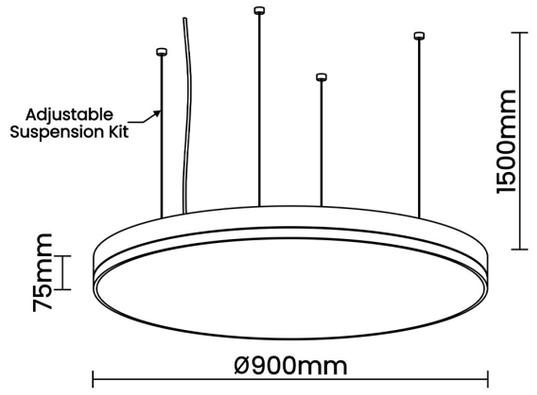

Product Reference

Environment Indoor

Installation Ceiling Suspended

Construction & Materials

Housing Extruded and Sheet Aluminium

Primary Lens -

Primary Reflector White Optics

Secondary Reflector -

Body Finish White,Black,Custom

Diffuser Opal PC,Microprismatic

Antiglare Baffle -

Thermal Management

Heat Sink Material Aluminium

Cooling Technique Passive Cooling

Optical System

Beam Direction General Diffuse

Tilt No

Swivel No

Electrical System

Driven with Constant Current Driver

Input Voltage/Hz 220V- 240V/50-60Hz

Control Gear Included

Mounting Integral

LED Power Watts 43.2W

System Power Watts 49.6W

Operating Voltage Vin 220-240 Vac

Power Factor p.f. > 0.95

Light Distribution

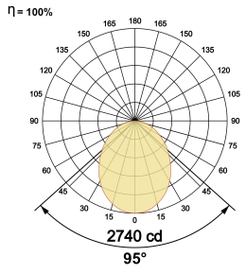

LED Technology

Binning 3 Step MacAdam

LED Life Time @ L80/B10 >50000 hours

Colour Rendering (CRI) CRI90

Led Type SMD mid power

LED Fitted Osram/Samsung Mid power LED array 43V-48Vdc/1050mA

Controls

Standard Switchable On/Off

Optional DDIM,CASAMBI,Non Dimmable

Ordering Details

Code Example:

Name	Watt	CCT	CRI	Angle	Finish	Control
Circulo P 90	**50W**	**WW27K**	**CRI90**	**96°**	**SWH**	**On/Off**

Select one from each column with highlighted values to create the ordering code

NAME	WATT	LUMEN	EFFICACY	CCT		CRI	ANGLE	FINISH		CONTROL	
Circulo P 90	**50W**	6498	131	2700K	**WW27K**	**CRI90**	96°	White	**SWH**	Non Dimmable	**On/Off**
		6597	133	3000K	**WW30K**			Black	**SBL**	Dali Dimmable	**DDIM**
		6746	136	4000K	**NW40K**			Custom	**CSM**	Casambi	**CBTM**
		6845	138	5700K	**CW57K**						
				2700K-5700K	**TW**						
Circulo P 90	**50W**			**WW27K**		**CRI90**	**96°**	**SWH**		**On/Off**	

Abby Lighting & Switchgear Limited 802 A, Fortune Terraces, New Link Road, Opp City Mall, Andheri West, Mumbai - 400053, India.

frontdesk@abbylighting.com, +91 7304623220

www.abbylighting.com

Abby reserves the right to discontinue any product from its collection at any time whatsover and without prior notice