ABBY LIGHTING

220V 240V 50/60Hz | CRI 80 | IP20 | L80B10 >50,000h | MacAdam Step 3 | Swivel | Tilt

Optional: Bluetooth | Dimmable | Tunable White | Warm to Dim | CRI 90

Go Pro 35 AR | 9W



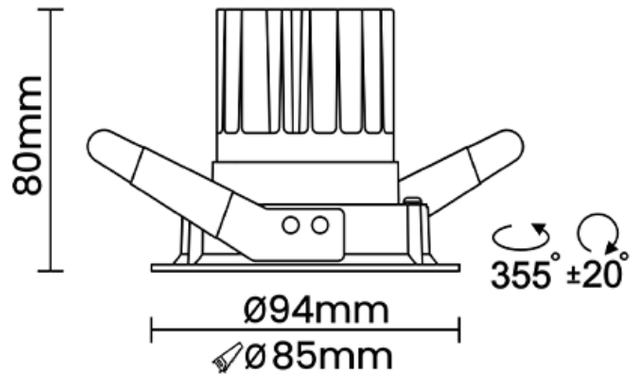

Product Reference

Environment Indoor

Installation Ceiling Recess

Construction & Materials

Housing Die Cast Aluminium

Primary Lens PMMA

Primary Reflector -

Secondary Reflector Anodised

Body Finish White,Black

Diffuser -

Antiglare Baffle -

Thermal Management

Heat Sink Material Die cast Aluminium

Cooling Technique Passive Cooling

Optical System

Beam Direction Adjustable

Tilt Yes

Swivel Yes

Electrical System

Driven with Constant Current Driver

Input Voltage/Hz 220V- 240V/50-60Hz

Control Gear Included

Mounting Remote

LED Power Watts 7.5W

System Power Watts 8.6W

Operating Voltage Vin 220-240 Vac

Power Factor p.f. > 0.95

Light Distribution

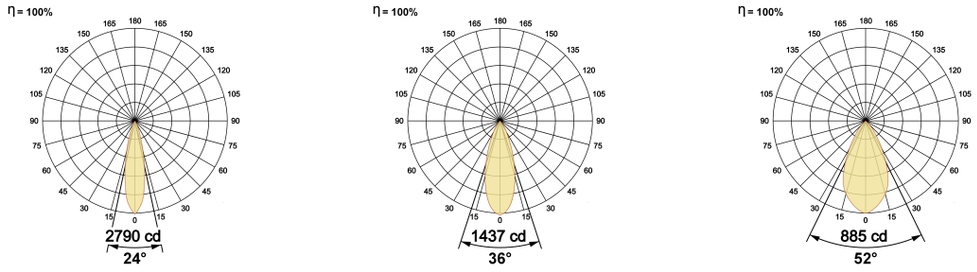

LED Technology

Binning 3 Step MacAdam

LED Life Time @ L80/B10 >50000 hours

Colour Rendering (CRI) CRI80,CRI90

Led Type COB

LED Fitted CREE COB LED 36Vdc/200mA

Controls

Standard Switchable On/Off

Optional PDIM,DDIM,BTTM,CASAMBI,Non Dimmable

Ordering Details

Code Example:	Name	Watt	CCT	CRI	Angle	Finish	Control
	Go Pro 35 AR	**9W**	**WW27K**	**CRI80**	**24°(MD)**	**SWH**	**On/Off**

Select one from each column with highlighted values to create the ordering code

NAME	WATT	LUMEN	EFFICACY	CCT		CRI	ANGLE	FINISH		CONTROL	
Go Pro 35 AR	**9W**	697	81	2700K	**WW27K**	**CRI80**	24°(MD)	White	**SWH**	Non Dimmable	**On/Off**
		722	84	3000K	**WW30K**	CRI90	36°(WD)	Black	**SBL**	Phase Dimmable	**PDIM**
		757	88	4000K	**NW40K**		52°(VWD)			Dali Dimmable	**DDIM**
		783	91	5700K	**CW57K**					Bluetooth Dimmable	**BTTM**
				2700K-5700K	**TW**					Casambi	**CBTM**
				Warm to Dim	**W2D**						
Go Pro 35 AR	**9W**			**WW27K**		**CRI80**	**24°(MD)**	**SWH**		**On/Off**	