ABBY LIGHTING

220V 240V 50/60Hz | CRI 80 | IP20 | L80B10 >50,000h | MacAdam Step 3 | Tilt

Optional: Bluetooth | Dimmable | Tunable White | Warm to Dim | CRI 90

Tiny AR | 10W

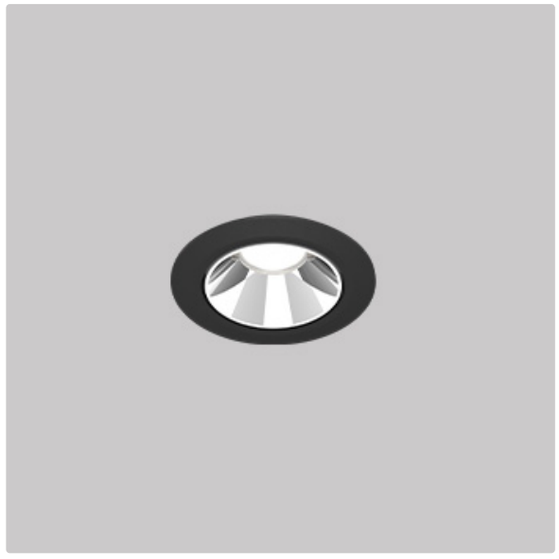

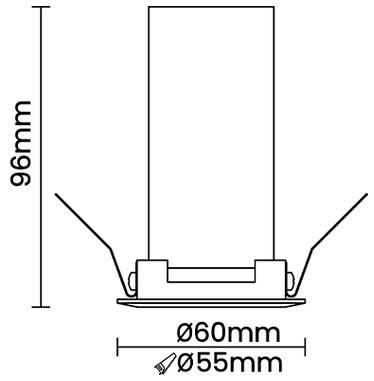

Product Reference

Environment Indoor

Installation Ceiling Recess

Construction & Materials

Housing Aluminium

Primary Lens Polycarbonate

Primary Reflector PC metallised

Secondary Reflector Anodised

Body Finish White,Black,Custom

Diffuser -

Antiglare Baffle -

Thermal Management

Heat Sink Material Die cast Aluminium

Cooling Technique Passive Cooling

Optical System

Beam Direction Fixed

Tilt Yes

Swivel No

Electrical System

Driven with Constant Current Driver

Input Voltage/Hz 220V- 240V/50-60Hz

Control Gear Included

Mounting Remote

LED Power Watts 8.7W

System Power Watts 10.0W

Operating Voltage Vin 220-240 Vac

Power Factor p.f. > 0.95

Light Distribution

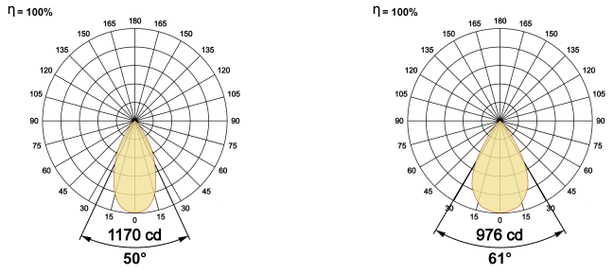

LED Technology

Binning 3 Step MacAdam

LED Life Time @ L80/B10 >50000 hours

Colour Rendering (CRI) CRI80,CRI90

Led Type COB

LED Fitted CREE COB LED 36Vdc/250mA

Controls

Standard Switchable On/Off

Optional PDIM,DDIM,BTTM,CASAMBI,Non Dimmable

Ordering Details

Code Example:	Name	Watt	CCT	CRI	Angle	Finish	Control
	Tiny AR	**10W**	**WW27K**	**CRI80**	**50°(MD)**	**SWH**	**On/Off**

Select one from each column with highlighted values to create the ordering code

NAME	WATT	LUMEN	EFFICACY	CCT		CRI	ANGLE	FINISH		CONTROL	
Tiny AR	**10W**	820	82	2700K	**WW27K**	**CRI80**	50°(MD)	White	**SWH**	Non Dimmable	**On/Off**
		850	85	3000K	**WW30K**	CRI90	61°(WD)	Black	**SBL**	Phase Dimmable	**PDIM**
		890	89	4000K	**NW40K**			Custom	**CSM**	Dali Dimmable	**DDIM**
		920	92	5700K	**CW57K**					Bluetooth Dimmable	**BTTM**
				2700K-5700K	**TW**					Casambi	**CBTM**
				Warm to Dim	**W2D**						
Tiny AR	**10W**			**WW27K**		**CRI80**	**50°(MD)**	**SWH**		**On/Off**	

Abby Lighting & Switchgear Limited 802 A, Fortune Terraces, New Link Road, Opp City Mall, Andheri West, Mumbai - 400053, India. frontdesk@abbylighting.com, +91 7304623220