ABBY LIGHTING

220V 240V 50/60Hz | IP20 | L80B10 >50,000h | MacAdam Step 3 | UGR<16 | CRI 90

Optional: Dimmable | Tunable White

Dark Knight Flute 45 P | 26W



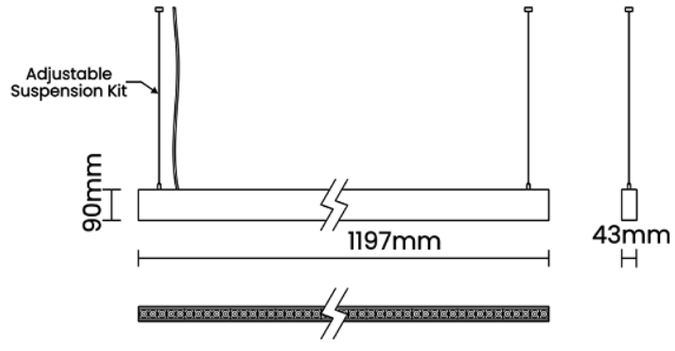

Product Reference

Environment Indoor

Installation Ceiling Suspended

Construction & Materials

Housing Aluminium Extrusion

Primary Lens -

Primary Reflector PC metallised

Secondary Reflector Black Raster – ABS

Body Finish White,Black

Diffuser -

Antiglare Baffle -

Thermal Management

Heat Sink Material Aluminium

Cooling Technique Passive Cooling

Optical System

Beam Direction Fixed Asymmetric

Tilt No

Swivel No

Electrical System

Driven with Constant Current Driver

Input Voltage/Hz 220V- 240V/50-60Hz

Control Gear Included

Mounting Remote

LED Power Watts 22.6W

System Power Watts 26.0W

Operating Voltage Vin 220-240 Vac

Power Factor p.f. > 0.95

Light Distribution

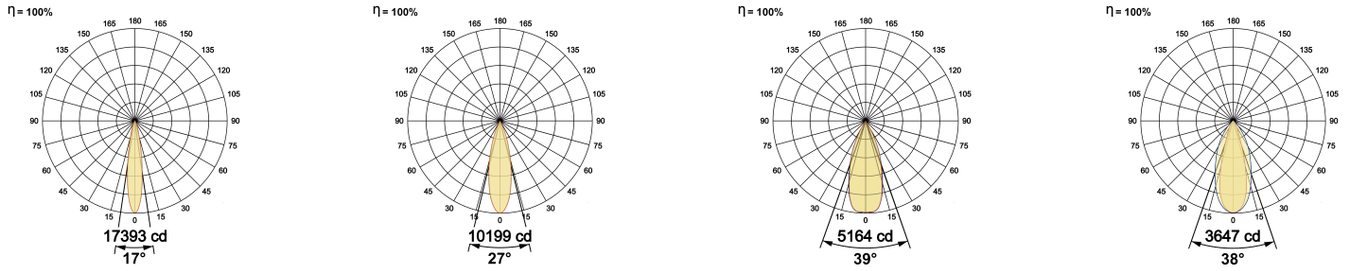

LED Technology

Binning 3 Step MacAdam

LED Life Time @ L80/B10 >50000 hours

Colour Rendering (CRI) CRI90

Led Type SMD mid power

LED Fitted Osram/Samsung Mid power LED array 42V-46Vdc/500mA

Controls

Standard Switchable On/Off

Optional DDIM,CASAMBI,Non Dimmable

Ordering Details

Code Example:	Name	Watt	CCT	CRI	Angle	Finish	Control
	Dark Knight Flute 45 P	**26W**	**WW27K**	**CRI90**	**17°(SS)**	**SWH**	**On/Off**

Select one from each column with highlighted values to create the ordering code

NAME	WATT	LUMEN	EFFICACY	CCT		CRI	ANGLE		FINISH		CONTROL	
Dark Knight Flute 45 P	**26W**	2340	90	2700K	**WW27K**	**CRI90**	17°(SS)	**27°(MD)**	White	**SWH**	Non Dimmable	**On/Off**
		2418	93	3000K	**WW30K**		27°(MD)		Black	**SBL**	Dali Dimmable	**DDIM**
		2548	98	4000K	**NW40K**		39°(WD)				Casambi	**CBTM**
		2600	100	5700K	**CW57K**		(ASY)					
				2700K-5700K	**TW**							
Dark Knight Flute 45 P	**26W**			**WW27K**		**CRI90**	**17°(SS)**		**SWH**		**On/Off**	